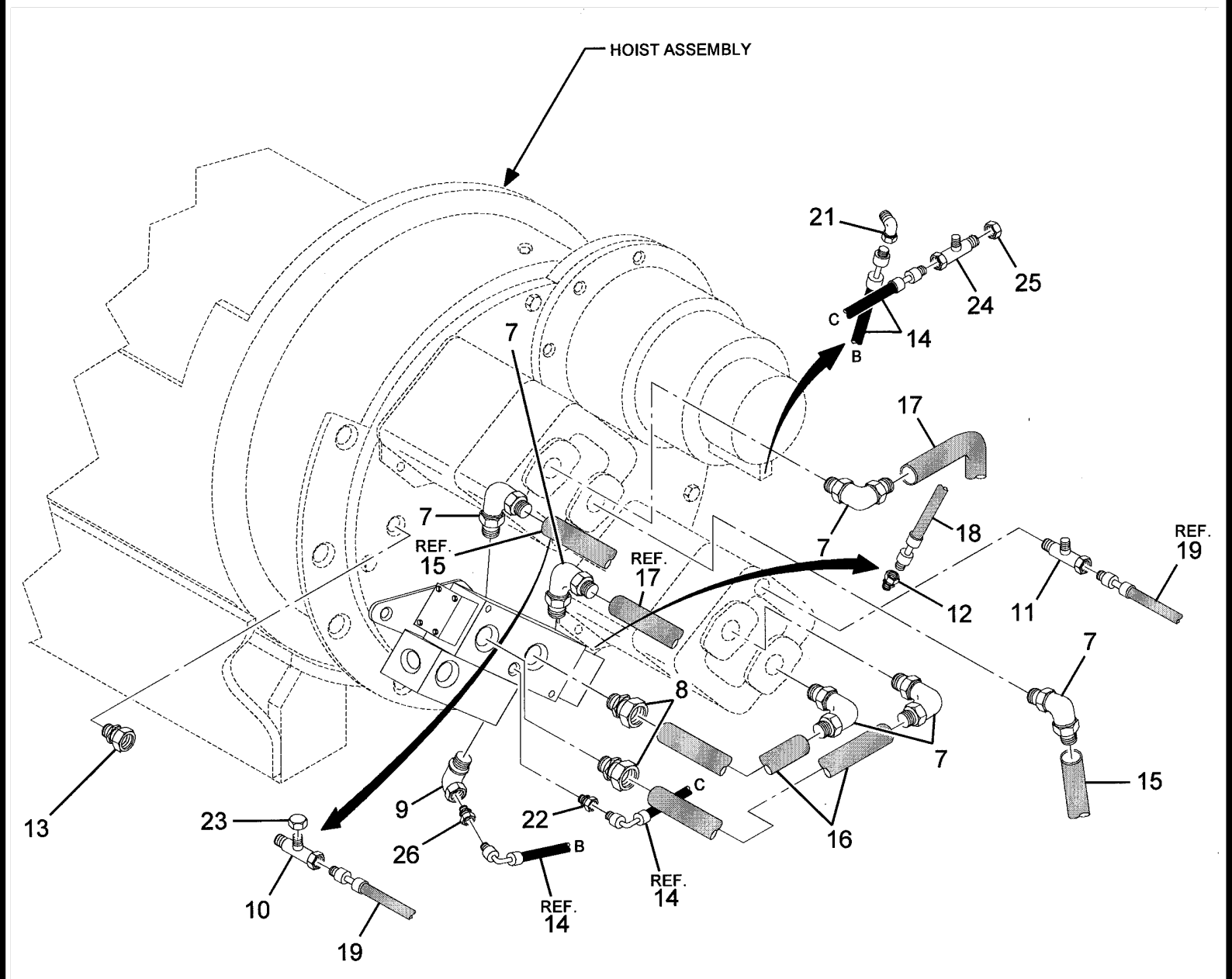

6974100038

(SHEET 2 OF 2)

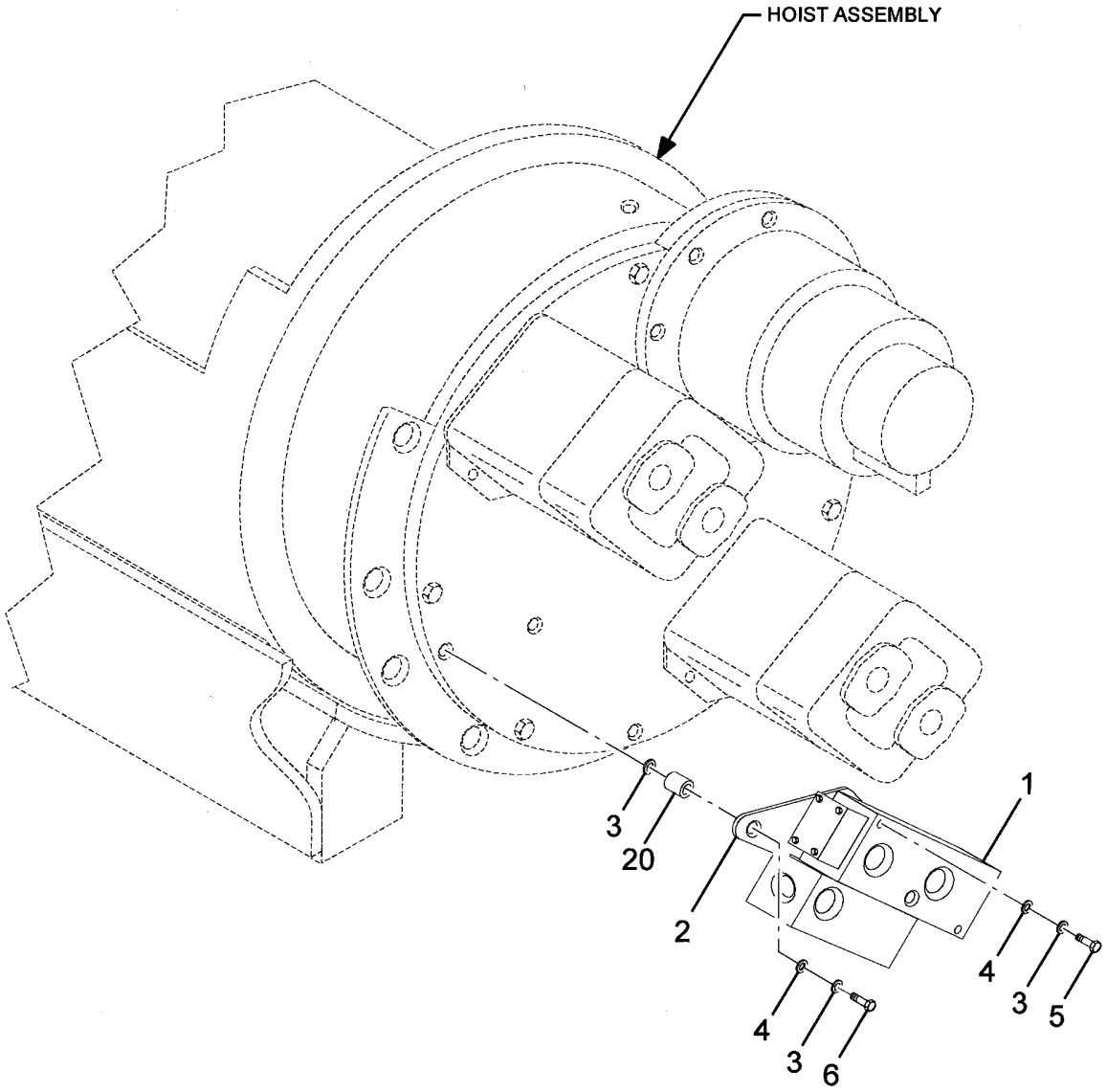

6974100038

(SHEET 1 OF 2)